WFIRST-AFTA Coronagraphic Instrument Science Yield Modeling Updates

206.01

Dmitry Savransky[1,2], Daniel Garrett[1], Rhonda Morgan[3], Patrick Lowrance[3]

Cornell University

CARL SAGAN INSTITUTE

NASA JPL

January 6, 2015

WFIRST-AFTA

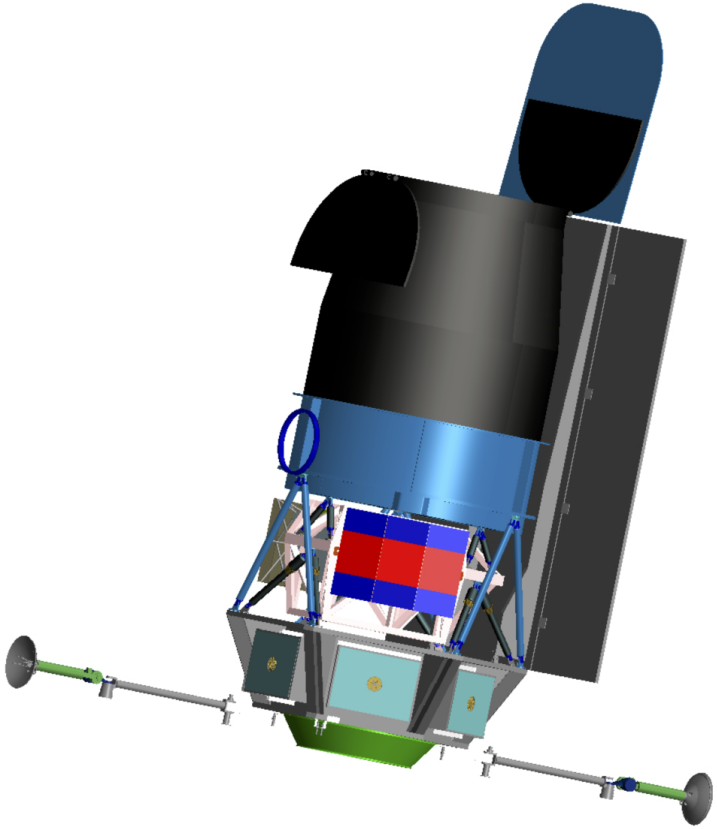

Figure: WFIRST-AFTA observatory

- 2.4 m aperture primary mirror
- Wide Field Imager/Spectrometer & Integral Field Unit
- Internal Coronagraph with Integral Field Spectrometer
- Overall Dry Mass: 4059 kg
- Structure: high stiffness composites; modular packaging for avionics
- GN&C/Propulsion: inertial pointing, 3-axis stabilized, mono-prop system for stationkeeping & momentum unloading
- Continuous 600 Mbps Ka-band to dedicated ground station
- L2 orbit
- Delta IV Heavy launch

WFIRST Coronagraphic Instruments

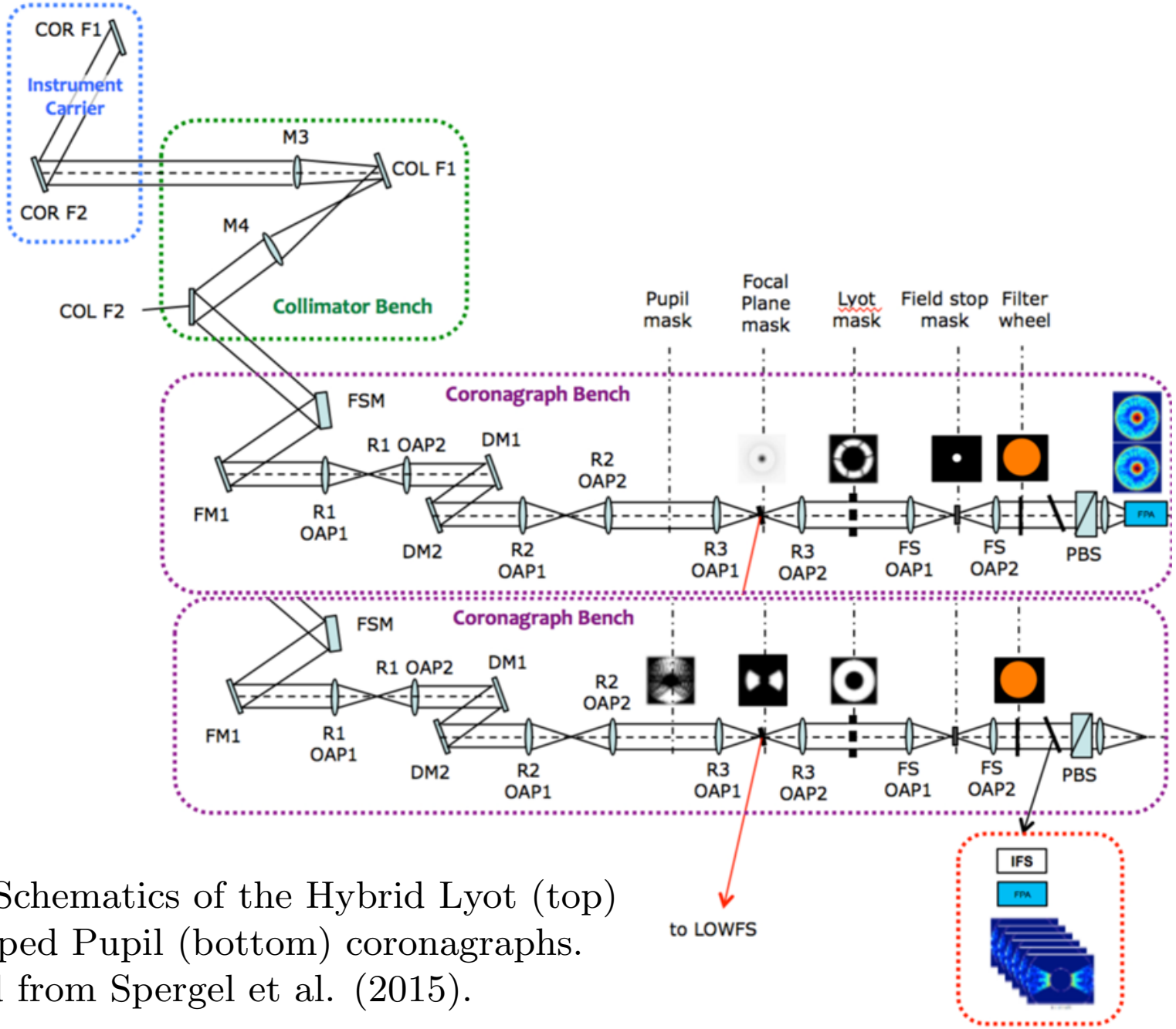

Figure: Schematics of the Hybrid Lyot (top) and Shaped Pupil (bottom) coronagraphs. Adapted from Spergel et al. (2015).

WFIRST Preparatory Science Investigation

- Describe the range of potential science yields of the WFIRST-AFTA coronagraph and determine:
  1. What is the optimal proportion of coronagraph time that should be devoted to searching for new planets versus attempting to image known exoplanets?
  2. What are the best targets and optimal observation times for potential new detections and followup observations?
  3. What are the optimal operating points in terms of detection band and permissible false positive rates as a function of angular separation and how does this affect the required integration time for each target?
- Develop and release an open source toolkit for the modeling of space-based planet finders

EXOSIMS

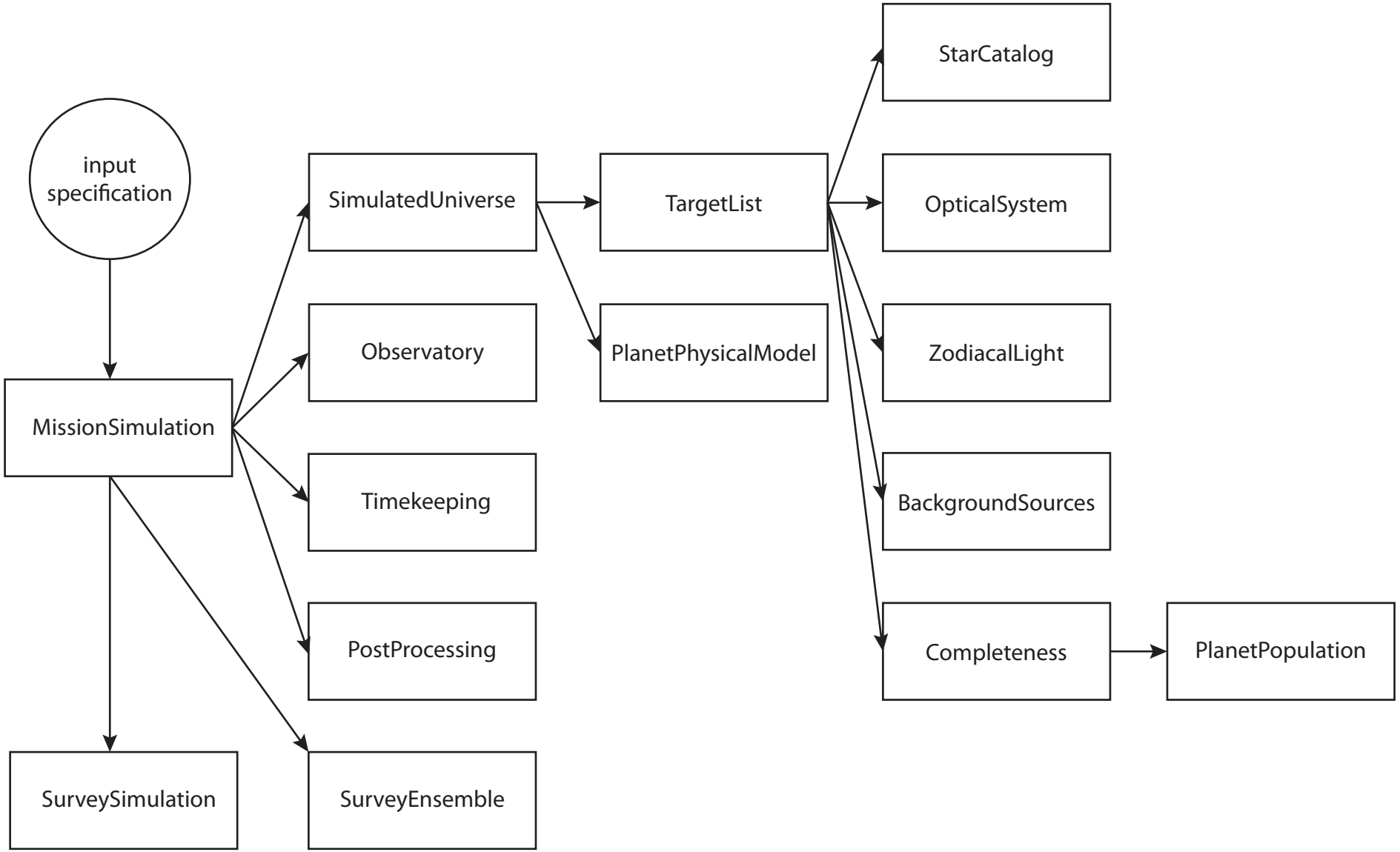

Savransky and Garrett (2015); `https://github.com/dsavransky/EXOSIMS`

Single Simulation Results

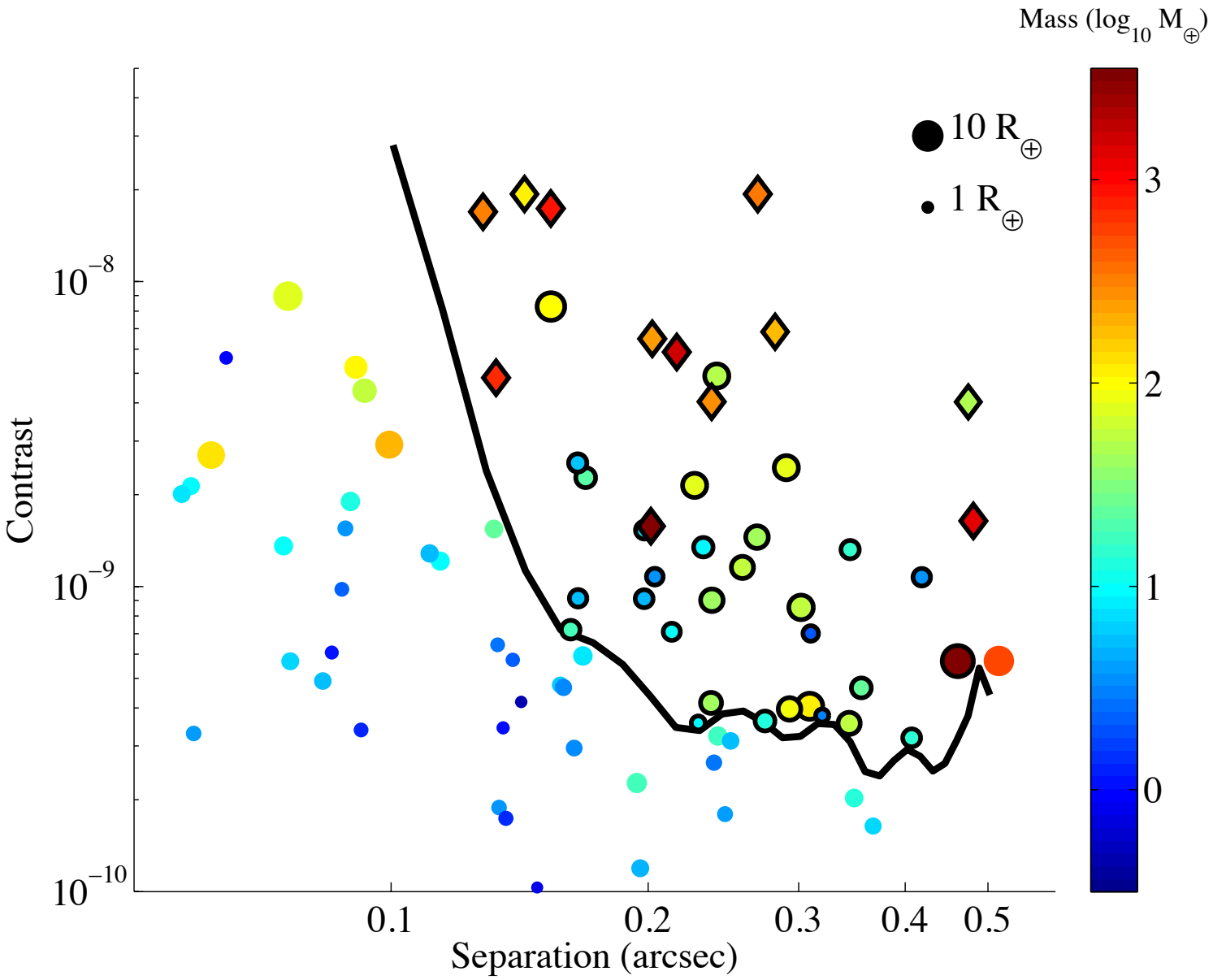

Simulation Ensemble Results

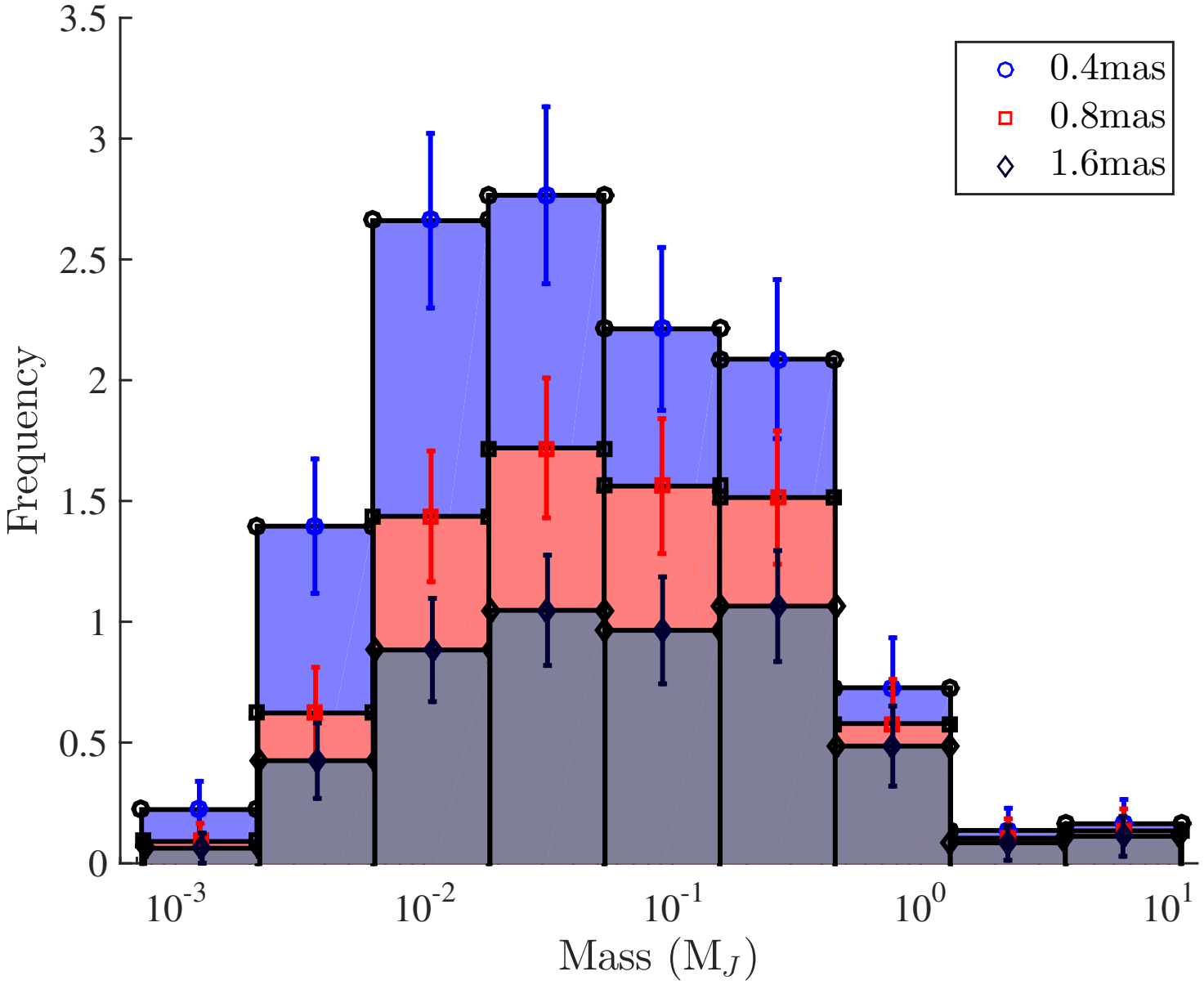

Simulation Ensemble Results

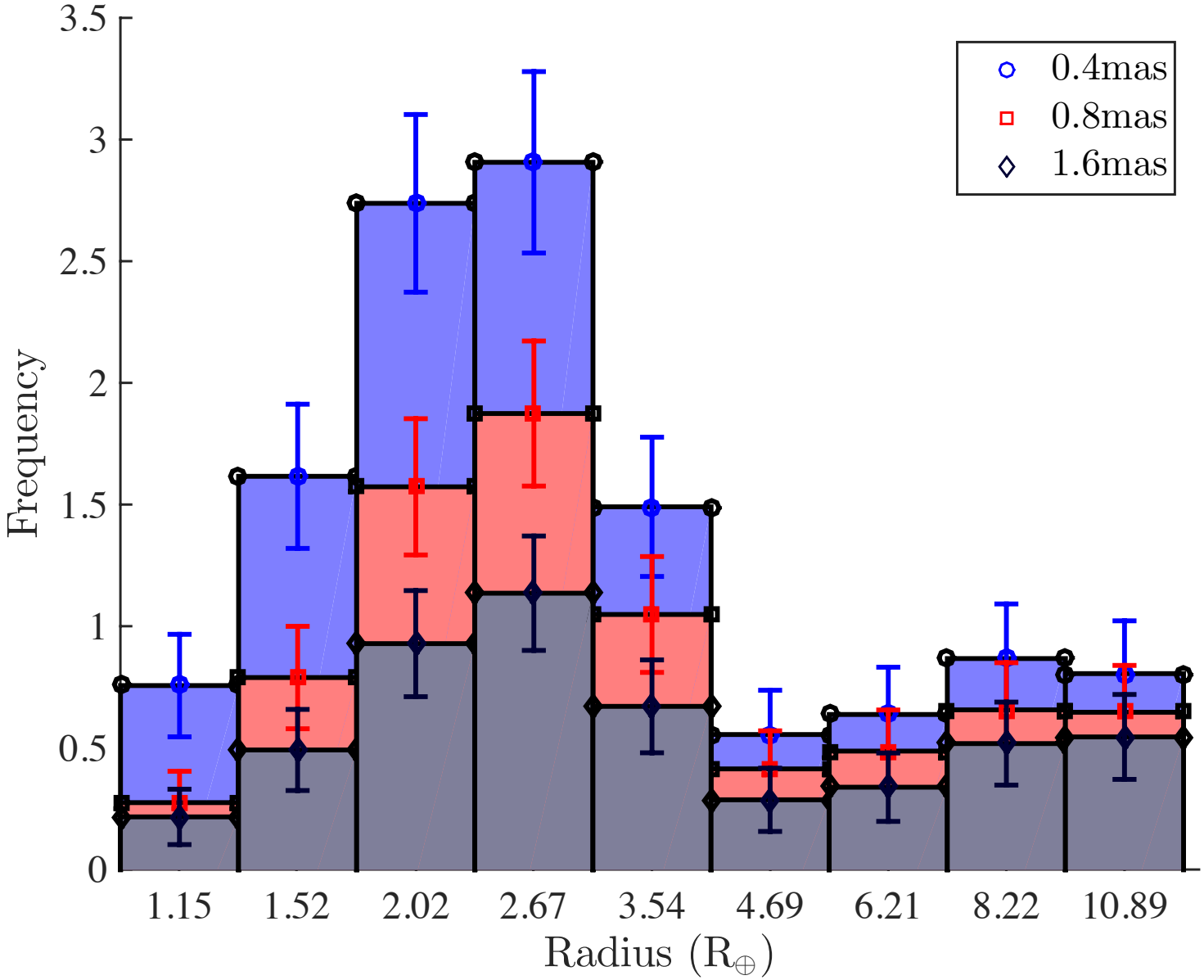

Exploring Mission Execution

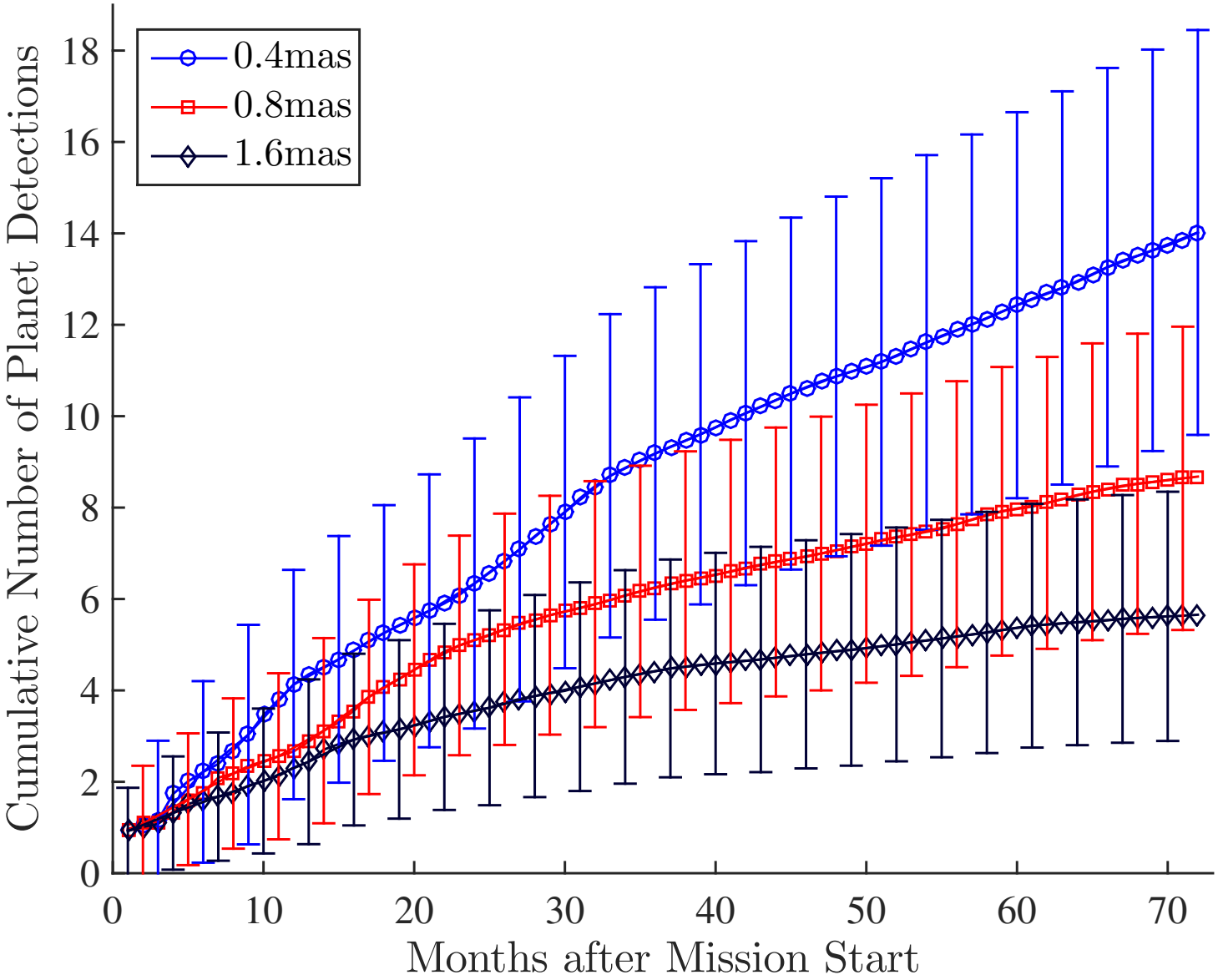

Parting Remarks

- WFIRST modeling is ongoing - more results soon
- Can (and will) incorporate all of the fantastic results from the other WPS projects and (soon) the SITs
- EXOSIMS is under active development
  - Please see `https://github.com/dsavransky/EXOSIMS` - in particular the ICD and as-built documentation
  - Comments and pull requests very very welcome
- Please see Morgan et al. (305.01)